ZL320240B1 Series

320x240 DOTS
1/240 DUTY,1/17 BIAS
GRAPHIC-COB

OUTLINE DIMENSIONS

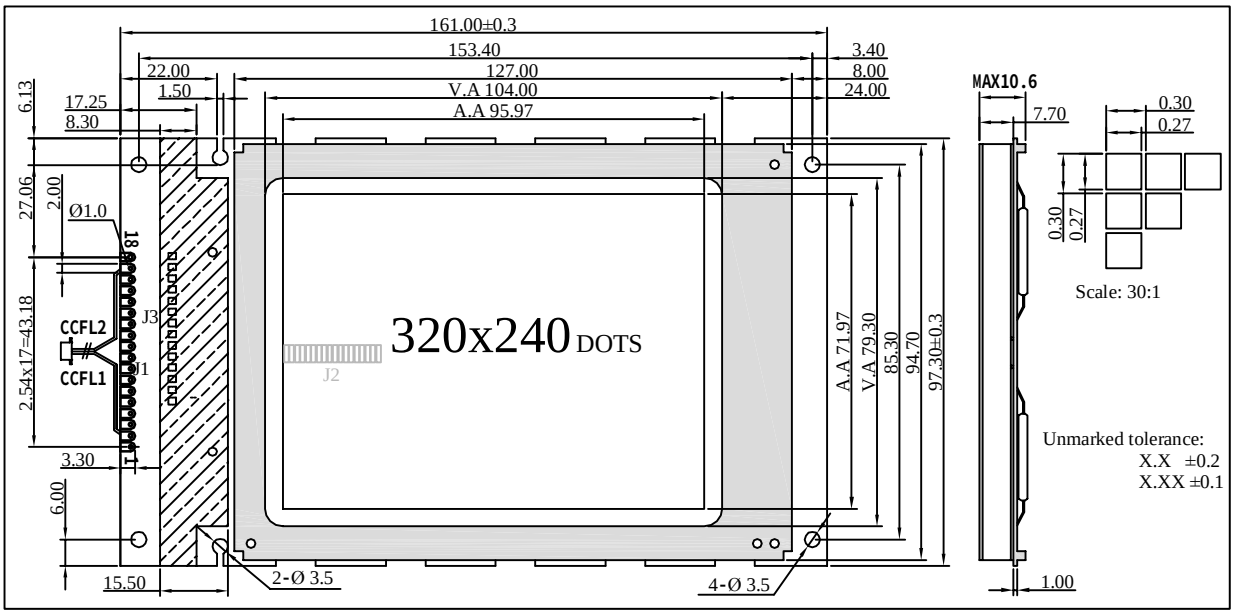

BLOCK DIAGARM & POWER SUPPLY

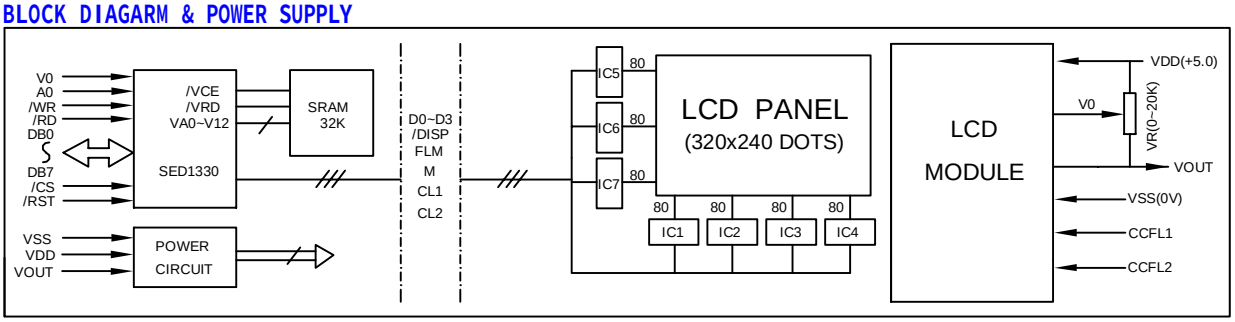

MECHANICAL SPECIFICATONS & FEATURE

item	Normal Dimensions(mm)	Feature	
Module Size(W*H*T)	161.0x97.3x10.6MAX	LCD Type	STN FSTN
View Area(W*H)	104.0x79.3	LCD Colour	STN:Yellow-Green ,Gray Other:Gray
Dots x Dots (W*H)	320x240	View Angle	6 O'clock ,12 O,clock
Dot Pitch (W*H)	0.30x0.30	Display Type	Positive Type,Negative Type
Dot Size (W*H)	0.27x0.27	Rear Polarizer	Transmissive,Reflective ,Transflective
- - - - - - - -	- - - - - - -	Operating Temperature	0℃ ~50℃ , -20℃~70℃
- - - - - - - -	- - - - - - -	Backlight	LED: Yellow, Bule,White,Green

ELECTRICAL CHARACTERISTICS

item	Symbol	Test Condition	Min.	Type.	Max.	Unit
Operating Voltage	Vdd	Ta=25℃	---	5.0V	---	V
Operating Voltage for LCD	Vlcd	Ta=25℃	---	4.6V	---	V
Supply Current	Idd	Ta=25℃,Vdd=5.0V	---	2.0	3.0	mA
Supply Current for Backlight	If	Ta=25℃,Vf=4.2V	---	400	---	mA

INTERFACE PIN CONNECTIONS

J1 and J2

Pin No	Symbol	Level	Description
1	VSS	- - -	Ground for logic(0V)
2	VDD	- - -	Power supplay for logic (+5.0V)
3	V0	- - -	Supply power for LCD drive
4	A0	H/L	Registr selection
5	/WR	L	Write signal
6	/RD	L	Read signal
7-14	DB0-DB7	H/L	Data bus lines
15	/CS	L	Chip Selection
16	/RST	L	Reset signal
17	VOUT	- - -	Negative Voltage Output
18	FG	- - -	Frame Ground

J3(no SED1330)

Pin No	Symbol	Level	Description
1-4	DB0-DB3	H/L	Data bus lines
5	/DISP	- - -	Display ON/OFF
6	FLM	- - -	Frame start signal
7	M	- - -	AC signal for LCD drivng
8	CL1	- - -	Data lacth pulse
9	CL2	- - -	Data shift pulse
10	VDD	- - -	Power supplay for logic (+5.0V)
11	VSS	- - -	Ground for logic(0V)
12	VOUT	- - -	Negative Voltage Output
13	V0	- - -	Supply power for LCD drive
14	FG	- - -	Frame Ground

REMARK

1.Negative type LCD colour : Bule. 2.File Version:01